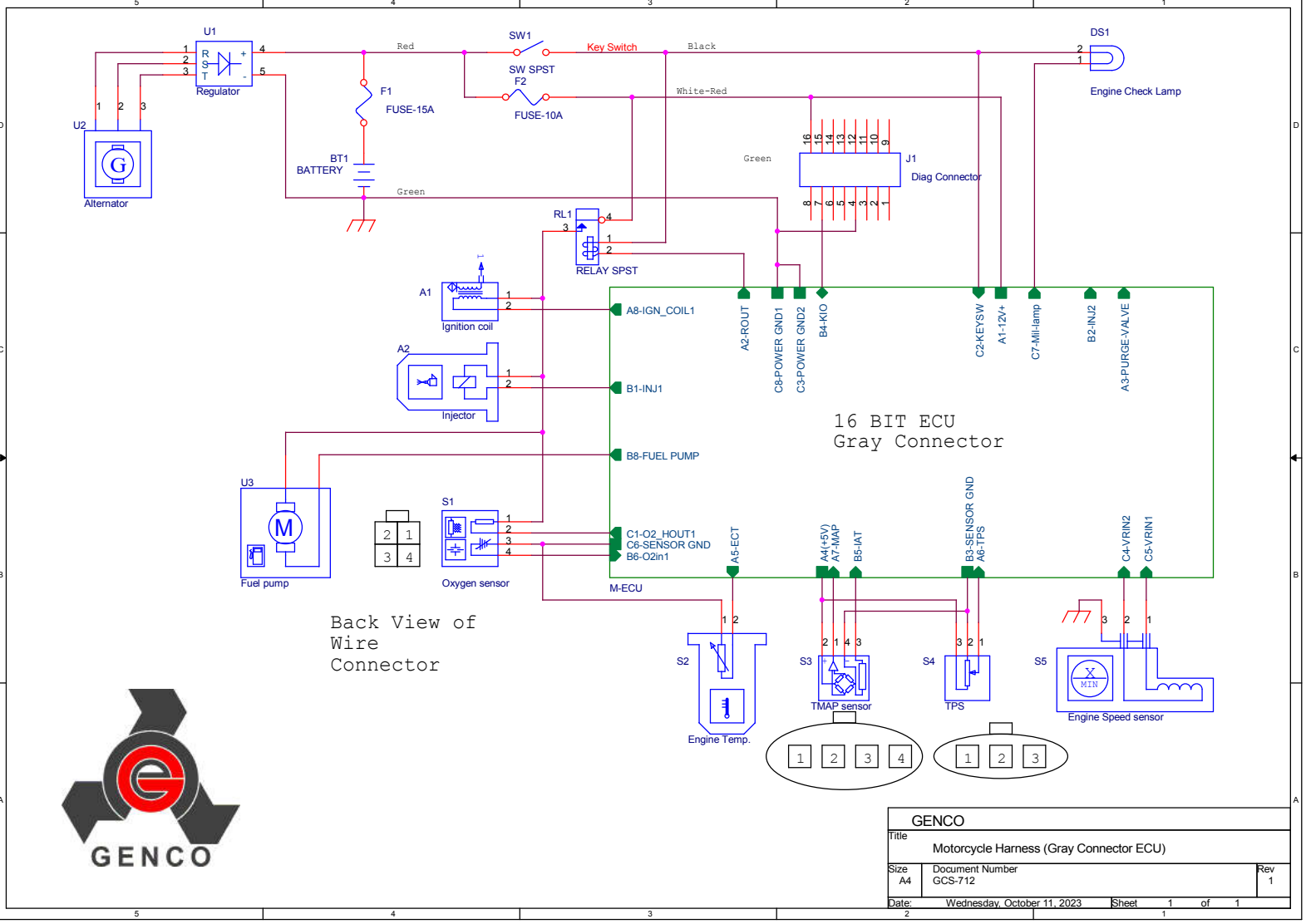

GENCO		
Title: Motorcycle Harness (Gray Connector ECU)		
Size: A4	Document Number: GCS-712	Rev: 1
Date: Wednesday, October 11, 2023	Sheet 1 of 1	